User Manual

123Electric

Battery management system

“123\Off-Grid”

Revision 1.0

Table of contents

Introduction

After the introduction of affordable Lithium-Ferro-Phosphate batteries, off-grid solutions became feasible. It is vital that such batteries are charged very carefully. In other words, they can easily be over-charged, or over-discharged. Cell-temperature and current are also very important, in order to guarantee a long life.

The 123electric Battery Management System (or : BMS) is primarily intended for prismatic LiFePO4-cells, but can also be adapted by the end-user for other cells like Li-Ion and LiPo, provided the cell-voltage is in the range of 2V to 5V.

System structure

The 123electric BMS is designed for battery-packs that have many cells in series, to form a high voltage battery-pack. Each cell is equipped with a small BMS-board, that monitors cell parameters like current, voltage and bypass-current and communicates over a one-wire interface with the BMS-controller. This BMS-controller collects this data, and displays that via a USB-interface on a Windows Computer. The electronic dashboard tells you in the blink of an eye, what the status of your battery-pack is. In the 'settings-menu' the user can adapt the system to his requirements :

- Consumer relay (Max. 60 Ampere DC)
- Charge relay (Max. 60 Ampere DC)

- Voltmeter (5 choices)
- Current Sensor used (100A for the off-grid version)
- Cell Capacity (10 - 999 Ah)
- Real Time Clock (24 h)
- Consumers starts
- Consumers stops
- Minimum Cell Voltage (error-level)
- Maximum Cell Voltage (error-level)
- Bypass Voltage (balancing voltage)

- Recharge Voltage
- Minimum Cell Temperature (error-level)
- Maximum Cell Temperature (error-level)
- Gauge linearization (for current- and capacity- gauge)
- Current-scale selection

Two relay-outputs are present, one has to be wired to the incoming charge current (for example: solar panels, wind turbine, generator etc.) The second relay has to be wired to the consumers (the inverters, motor controller or any other load). In this way, it is possible to protect the batteries against over-charging or over-discharging.

The incoming charge current will be blocked through the relay when the battery pack capacity is 100% SOC, and switches on again if the capacity is below the programmable "Charge restart".

The consumers will be switch off if the battery pack capacity is 0% or one of the cells goes below the programmable minimum cell voltage, and switches on again if the capacity is above the programmable "Discharge restart".

Optional: The BMS-controller can be connected with most chargers from the TC/Elcon-range, via the three-wire control-connector. (No CAN option required) This can be useful if you would like your battery pack charging from the mains or a generator.

The TC/Elcon charger starts charging when you connect the mains (start the fuel generator), and stops charging when the capacity is 100%.

Keep the batteries in perfect condition

The drawing below shows that your expensive batteries are in good hands with 123 electric.

The system sets the coulomb counter to 100% when either all cells get to V-bypass or one cell reaches V-max. (You can change these settings with the PC software by yourself.)

Calibrating the coulomb counter to 100% is important, as otherwise small errors will appear, because of changes in the charging efficiency, aging of the batteries etc. etc.

The width of the green (safe) area, can also be selected by yourselves. If you use 90 Ah cells, for instance, and you only want to use 60% of the capacity, you can enter 60% of 90 Ah = 54 Ah in the field for Cell-capacity.

Conclusion : the upper limit is safe-guarded by entering V-max / V-bypass, and the lower limit by Cell-capacity.

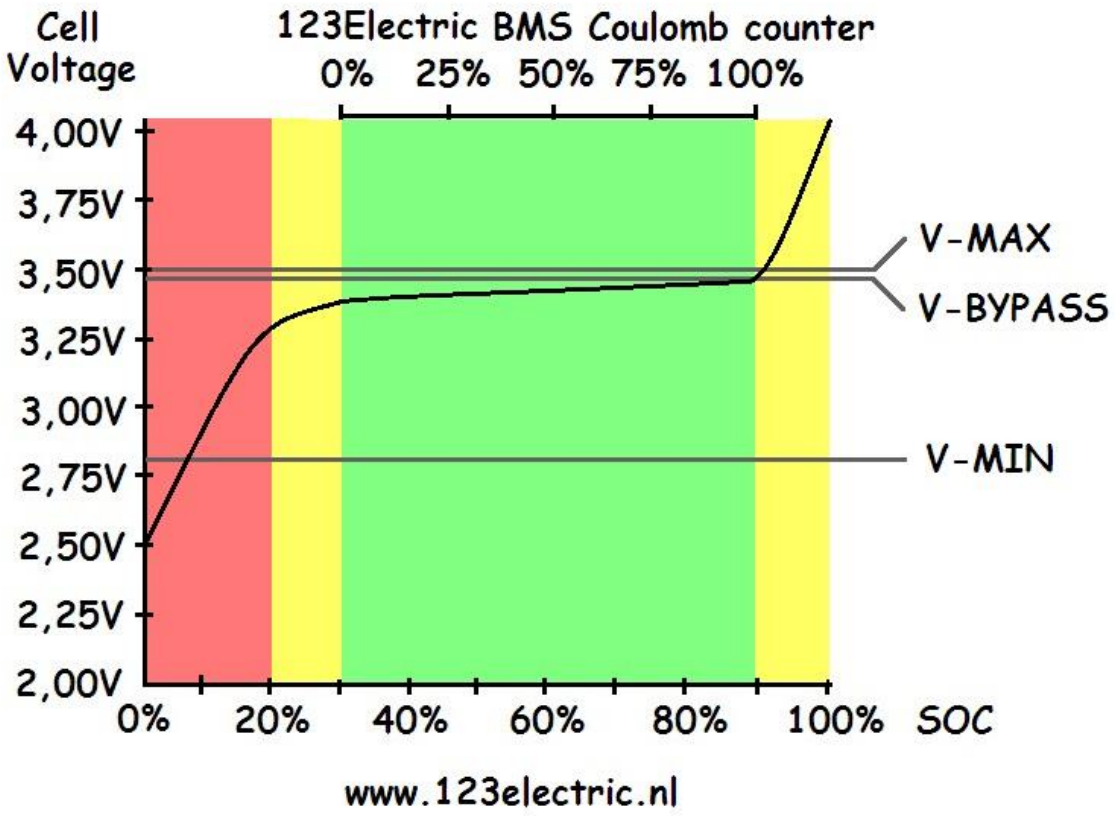

Specifications

Supply Voltage of BMS-controller	8-60 Volt
Idle Current of the BMS-controller inclusive current sensor	< 10 mA
Number of Cells	2 - 255
Balancing Current	1 Amp.
Idle Current BMS-boards	< 100 uA
Current-sensor	100 Amp.
Resolution	10 Bit

BMS Board mounting

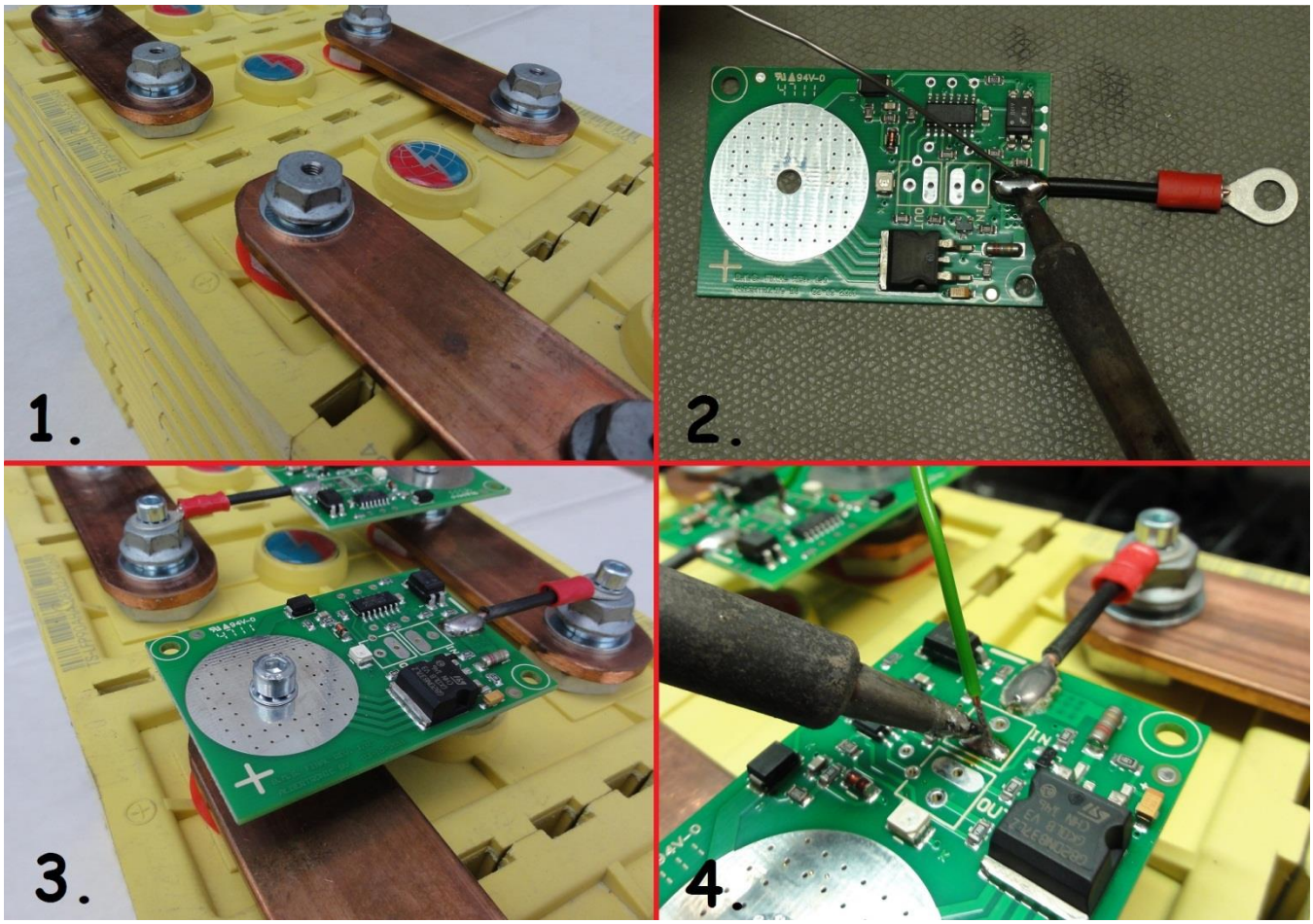

WARNING : be aware that your battery-pack contains a large amount of energy, which can be potentially lethal. Use isolated spanners, to prevent any short circuits. High inrush currents, causing arc-ing (sparks) and ultra-high electro magnetic levels, can easily damage electronic circuits.

We therefore strongly recommend to always FIRST connect the so called "large current connections" in a new setup, and THEN separately connect the BMS-boards.

A good way of doing this is indicated on photo number one. Standard M8-bolts are modified with an M4 threaded hole in the top. After thorough cleaning of the cell-poles, the copper strips are bolted-on. Don't forget to also attach wires to the first and last cell in the same way, and connect these to the solar panel and the load.

Now, prepare the BMS-boards as shown on photo number two. Use thick solid-copper wire for this. Use the right length so that the end-result looks good.

Connect all the boards as shown in photo number three. The BMS-board always to be mounted on the 'plus'-pole of the cell. This '+' is also indicated on the board.

Remember to use an 'IN'-board for the first cell, and an 'OUT'-board for the last cell. (see "wiring diagram overview")

Might you have two battery packs, you will have to equip each pack with its own 'IN' and 'OUT'-board. (see "split pack wiring overview")

For optimum noise-immunity the wiring from- and to- the "IN" and "OUT" boards, will have to be so called "twisted-pair". (see "wiring diagram overview" and/or "split pack wiring overview")

It speaks for itself, that if you would plan to use for instance three packs, that you will have to order three "IN"-boards, and three "OUT"-boards.

For optimum reliability, the one-wire interconnect should be soldered as indicated in the diagrams. Use a small soldering-iron, and take your time to do this job VERY carefully.

NOTE: Make sure the BMS boards are located in a dry and dust free area, otherwise we advise to use a special PCB coating.

Wiring Diagram Overview

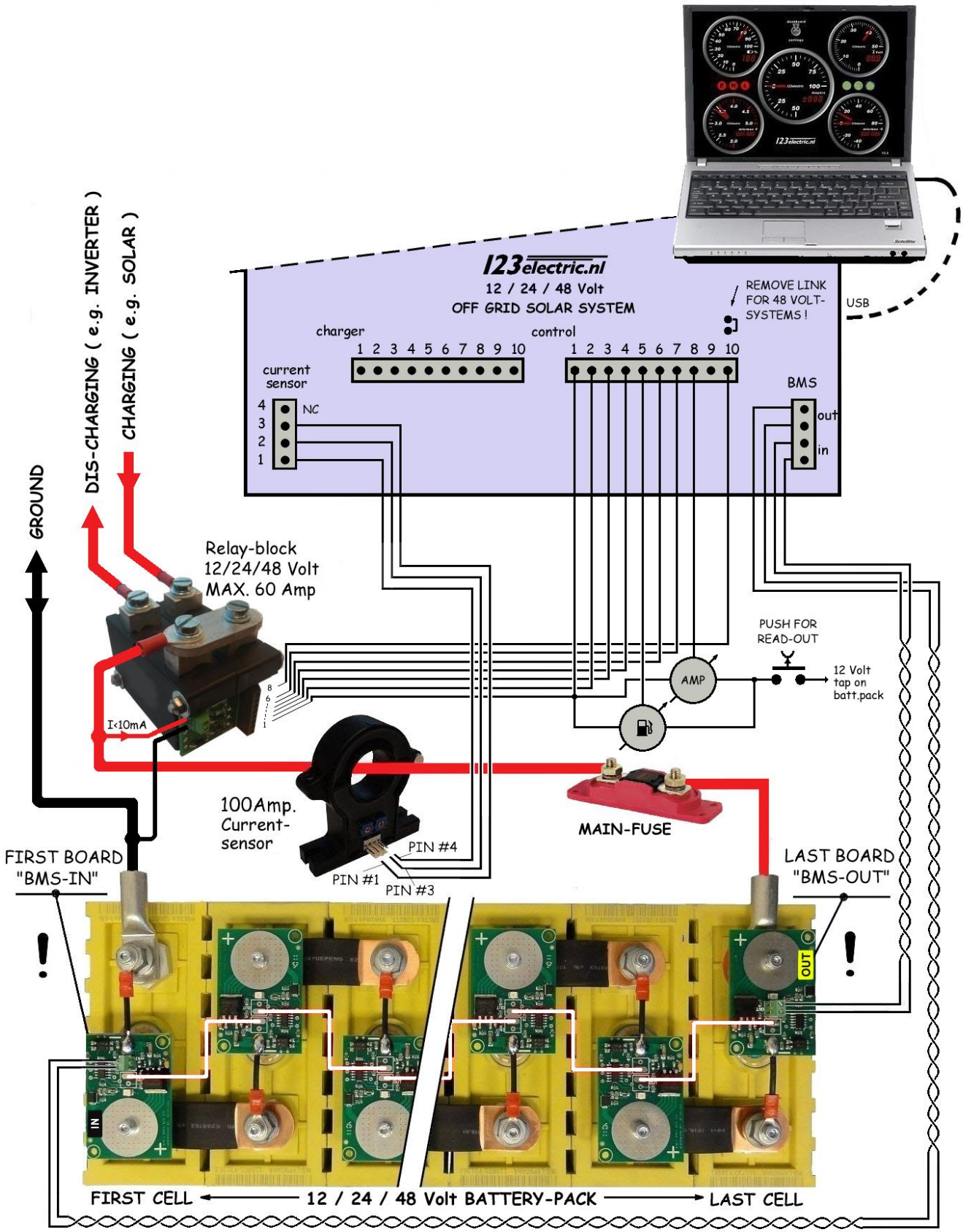

Split pack wiring overview

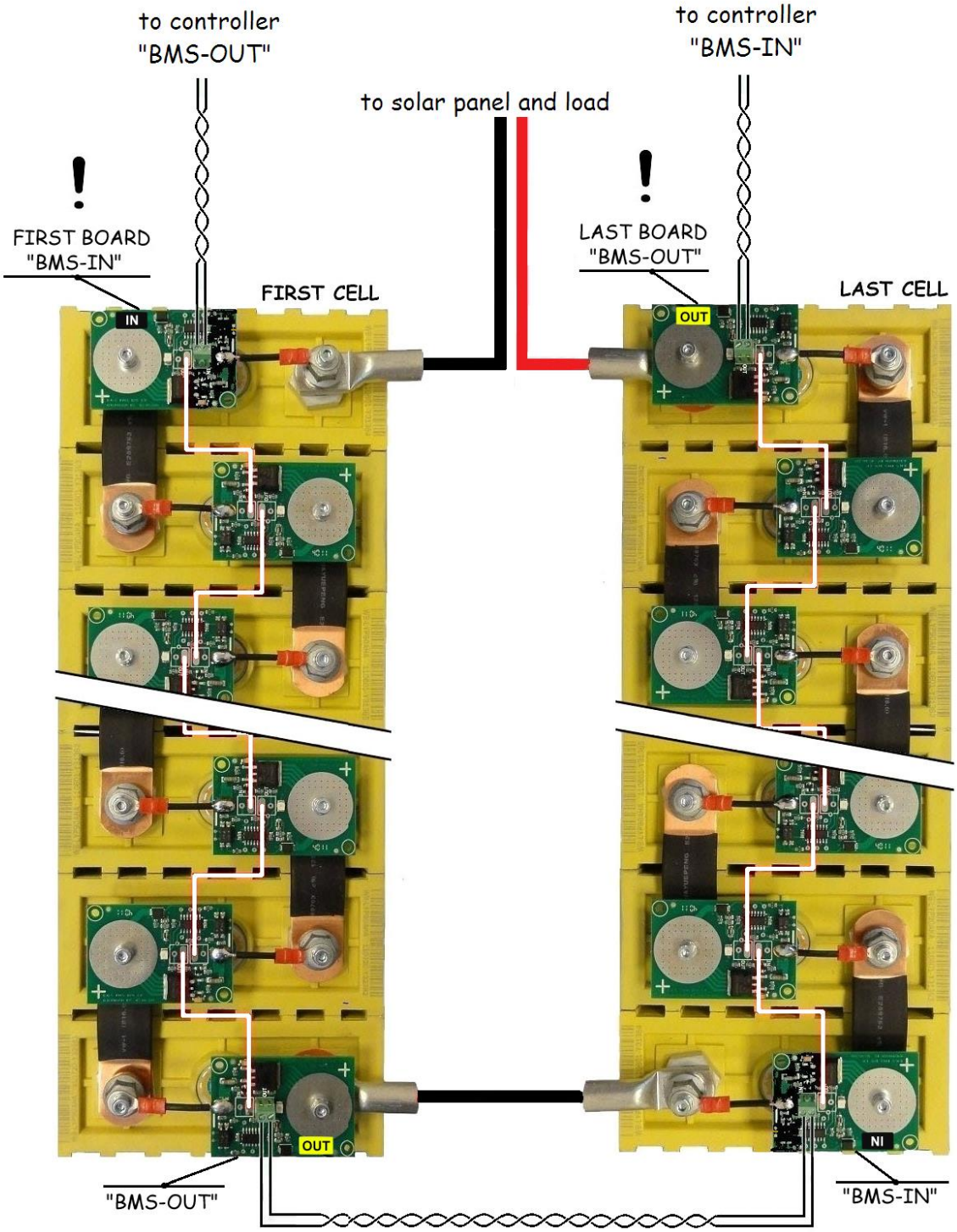

Controller connections

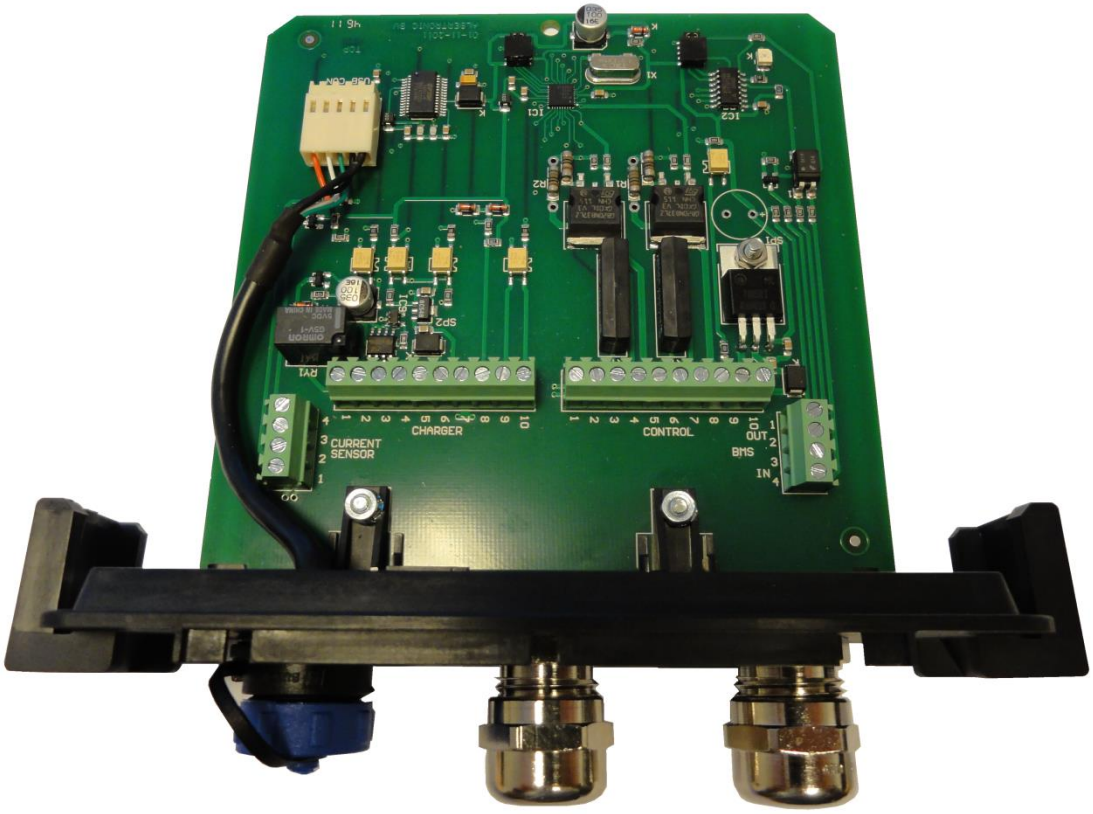

Control:

1. Relay Block control → 1
2. Relay Block control → 2
3. Relay Block control → 3
4. Relay Block control →4
5. Not connected
6. Relay Block control → 5
7. Relay Block control → 6
8. Not connected
9. Not connected
10. Relay Block control → 8

BMS Boards:

1. BMS out
2. BMS out
3. BMS in
4. BMS in

Current Sensor:

1. Ground
2. Analog in
3. 5 Volt power
4. Not connected

Optional Charger connections:

1. Optional relay output (only for on/off charger)
2. Optional relay output (only for on/off charger)
3. Optional relay output (only for on/off charger)
4. Analog out (for analog controlled charger)
5. 12 Volt In (for analog controlled charger)
6. Ground (for analog controlled charger)
7. Not connected
8. Not connected
9. Not connected
10. Not connected

Current sensor connections

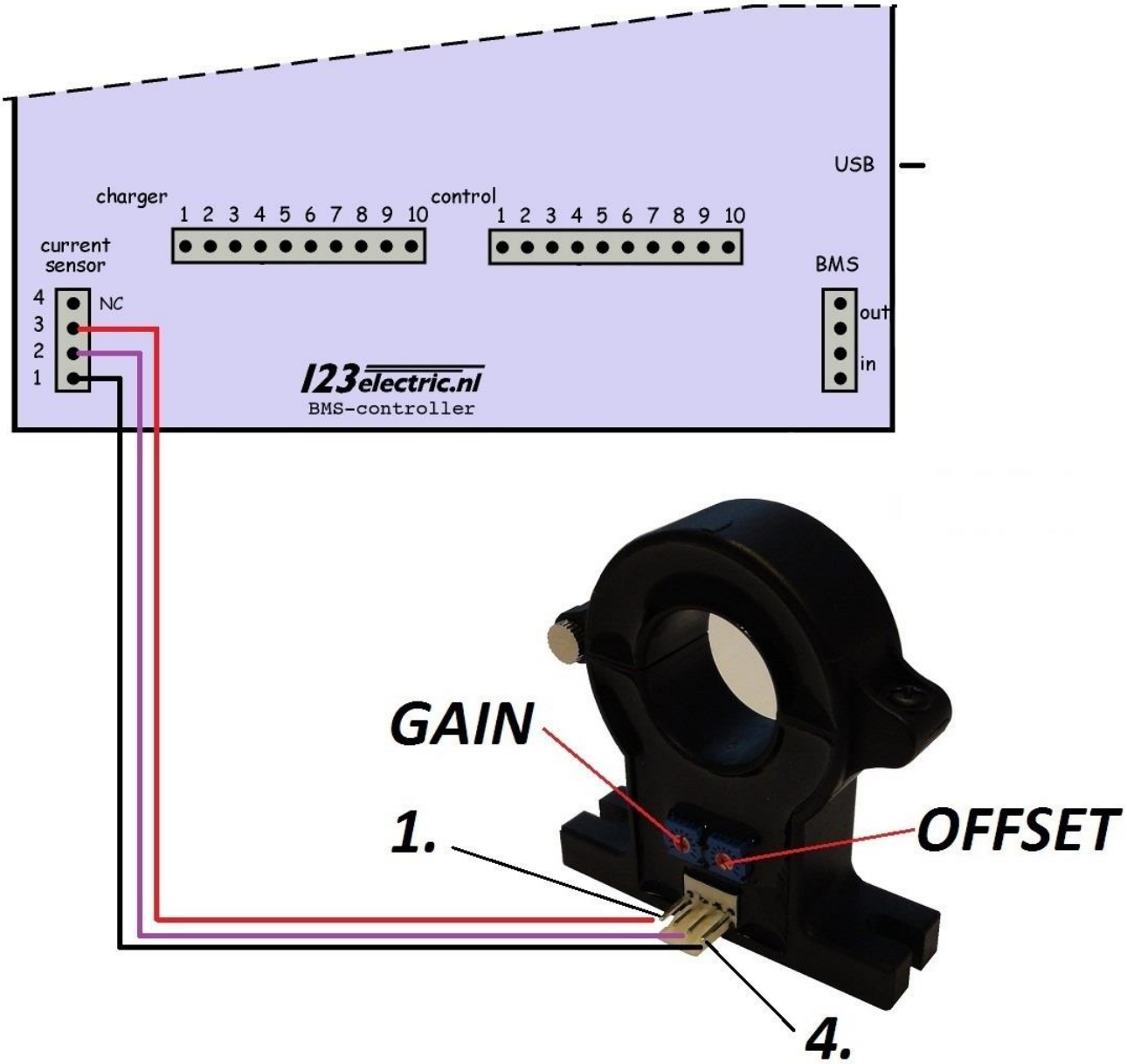

Control Unit:

1. Ground
2. Analog Output
3. +5 Volt Power
4. Not Connected

Current sensor:

1. +5 Volt Power
2. Not Connected
3. Analog Output
4. Ground

Notes:

- Connect the power source and output correctly, never make a wrong connection.
- Two potentiometers can be adjusted by turning slowly to the required accuracy with a small screwdriver. Normally factory calibrated ,only necessary if the idle current isn't zero.

Optional TC/Elcon Charger connections

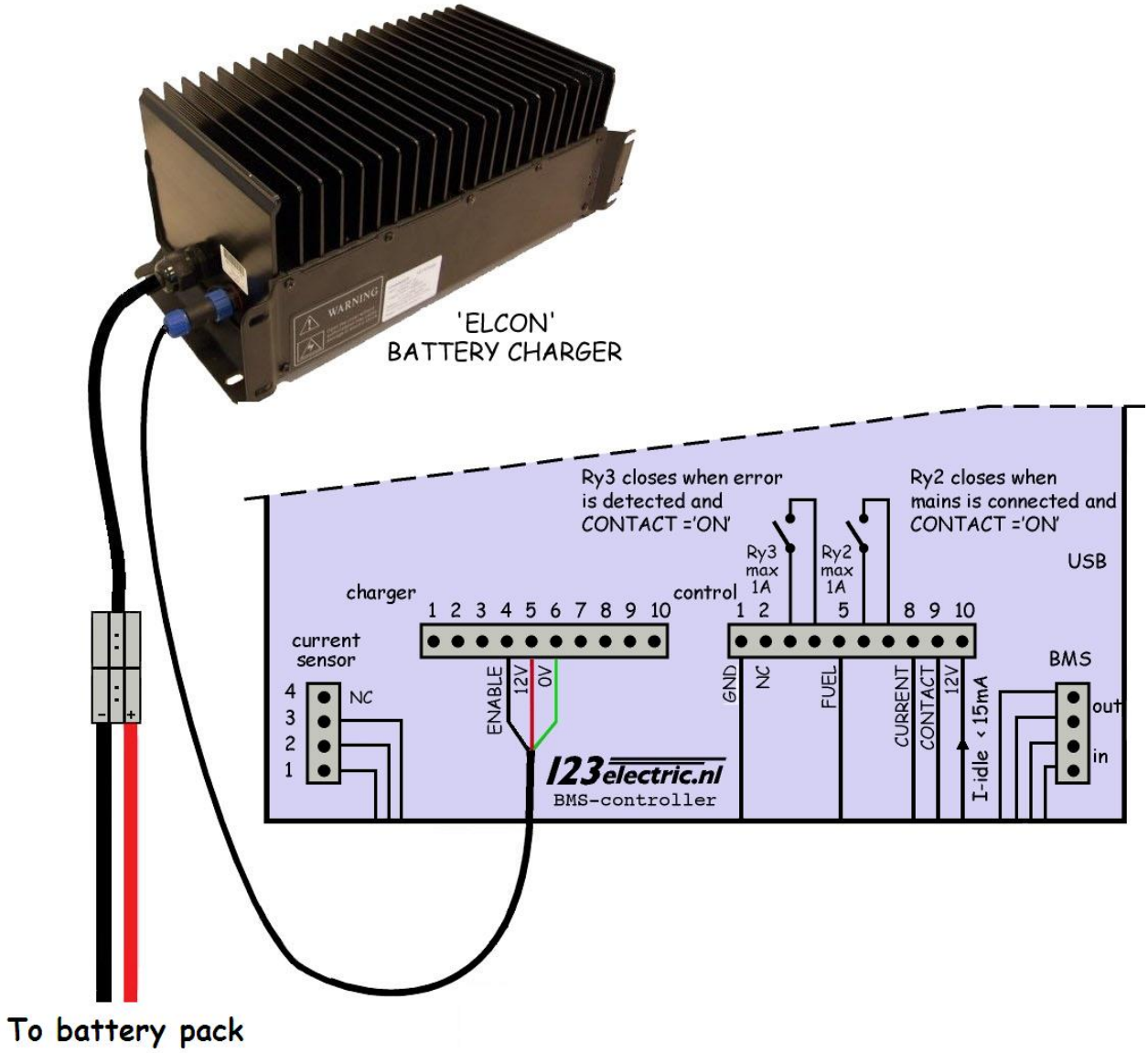

Control unit:

Enable(Black)	Pin 4
12 Volt(Red)	Pin 5
Ground (Green)	Pin 6

TC/Elcon charger:

Standard TC/Elcon connector

Software settings

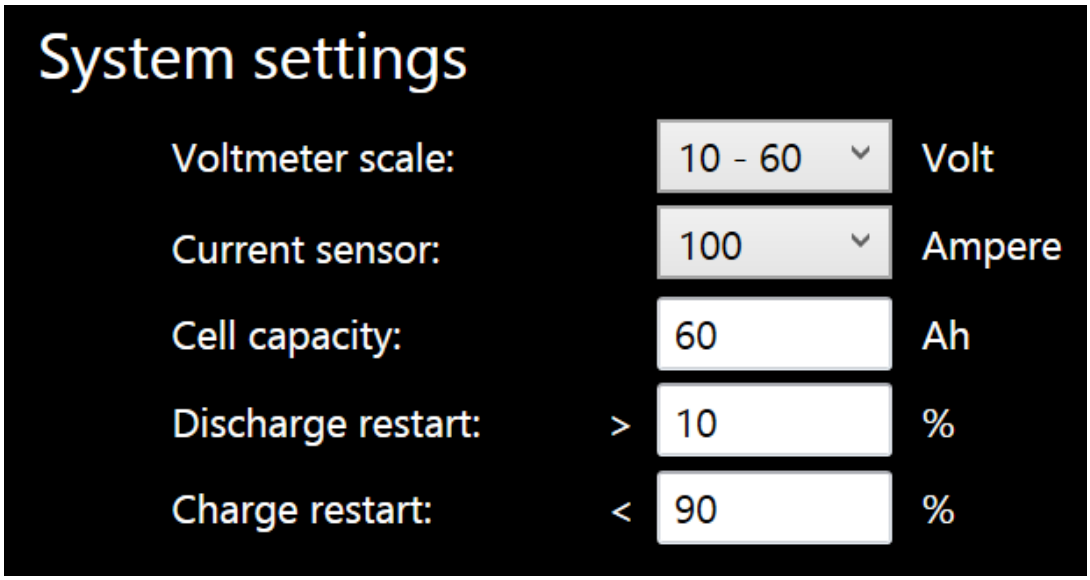

Voltmeter scale:
In this part of the settings menu you can select one of five different volt meters on the electronic dashboard for the reading of the pack voltage:

10 – 60 Volt
40 – 140 Volt
100 – 200 Volt
150 – 300 Volt
250 – 500 Volt

Current sensor:
The 123\Off-Grid can work in conjunction with the 100 Ampere current sensor. Select the 100 ampere sensor.

Note: Selecting another current sensor will automatically select another current scale on the electronic dashboard. This is not advised for the 123\Off-Grid because the relays can't handle such large currents.

Cell capacity:
The cell capacity can of course be set to the capacity of the cells used. We advise however to take only 70% of the rated capacity, to comply with cell aging and temperature effects.

Example: if you have 90 Ah cells, enter 65 Ah in the capacity field.

For more explanation take a look at page 5.

Discharge restart
The consumers relay will be switched off if the battery pack capacity is 0% **or** one of the cells goes below the programmable minimum cell voltage, and switches on again if the capacity is above the programmable “Discharge restart”.

Charge restart
The incoming charge current will be blocked through the relay when the battery pack capacity is 100% SOC, and switches on again if the capacity is below the programmable “Charge restart”.

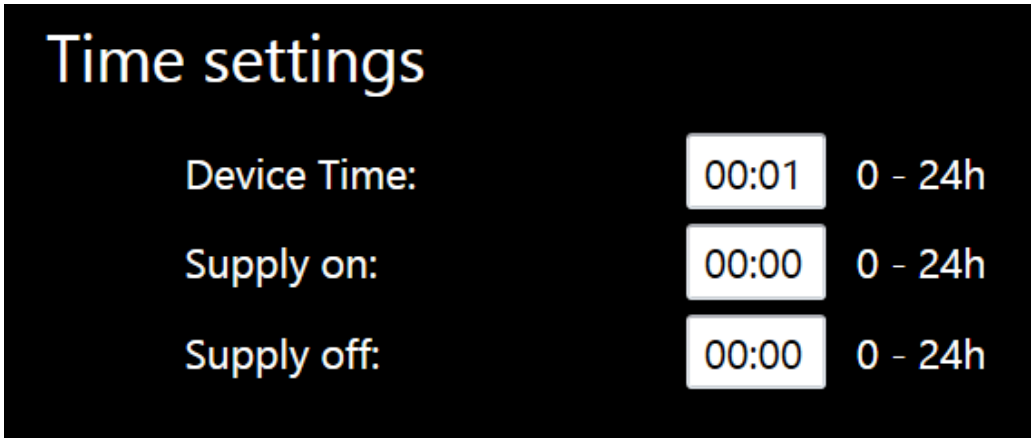

Time settings:

Device time:
Here you can enter the time in a 24h fashion. The BMS controller keeps this time as long as at least 8 Volt will be supplied to the main controller.

Supply starts:
Here you can enter the time after which consuming power is permitted. Consuming only starts at the moment that the device time equals the start time **and** enough capacity is available in the battery pack.

Supply stops:
Here you can enter the time after which consuming power is not permitted. Consuming only stops at the moment that the device time equals the stop time **or** the battery capacity have reached 0%.

Important:
If the start and stop time are equal consuming energy is always permitted, provided there is enough capacity left in the battery pack.

Minimum:
If one of the cells gets below this threshold the “E” and “L“ indicator on the electronic dashboard are switched on. The capacity will be set to 0% SOC.

Maximum:
If one of the cells gets above this threshold the “E” and “H“ indicator on the electronic dashboard are switched on. Charging current will be blocked by the relay to protect over-charging the batteries.

Bypass:
This is the voltage where you want all the cells to end up. Above this Voltage the cell modules start to dissipate 1 Ampere.

Recharge Threshold:
Assume you leave your off-grid solar system for a long time. By self-discharge of the batteries, the voltage will drop. To keep your battery pack up to date: If one of the cells gets below the recharge threshold a new charging cycle will start.

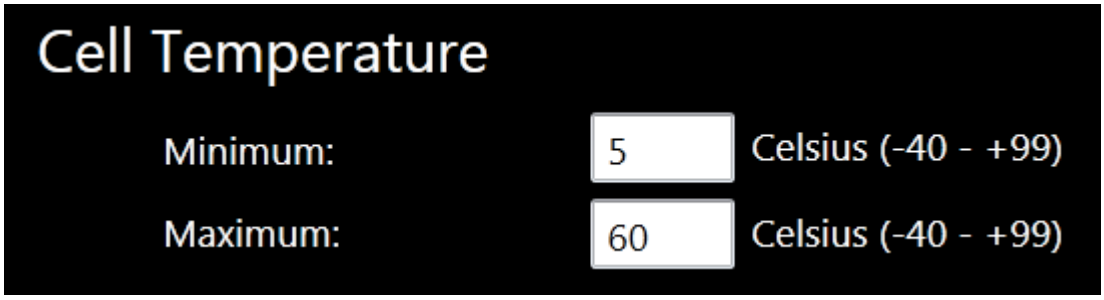

Minimum:
If one of the cells gets below this threshold the “E” and “L“ indicator on the electronic dashboard are switched on.

Maximum:
If one of the cells gets above this threshold the “E” and “H“ indicator on the electronic dashboard are switched on.

Software screenshots